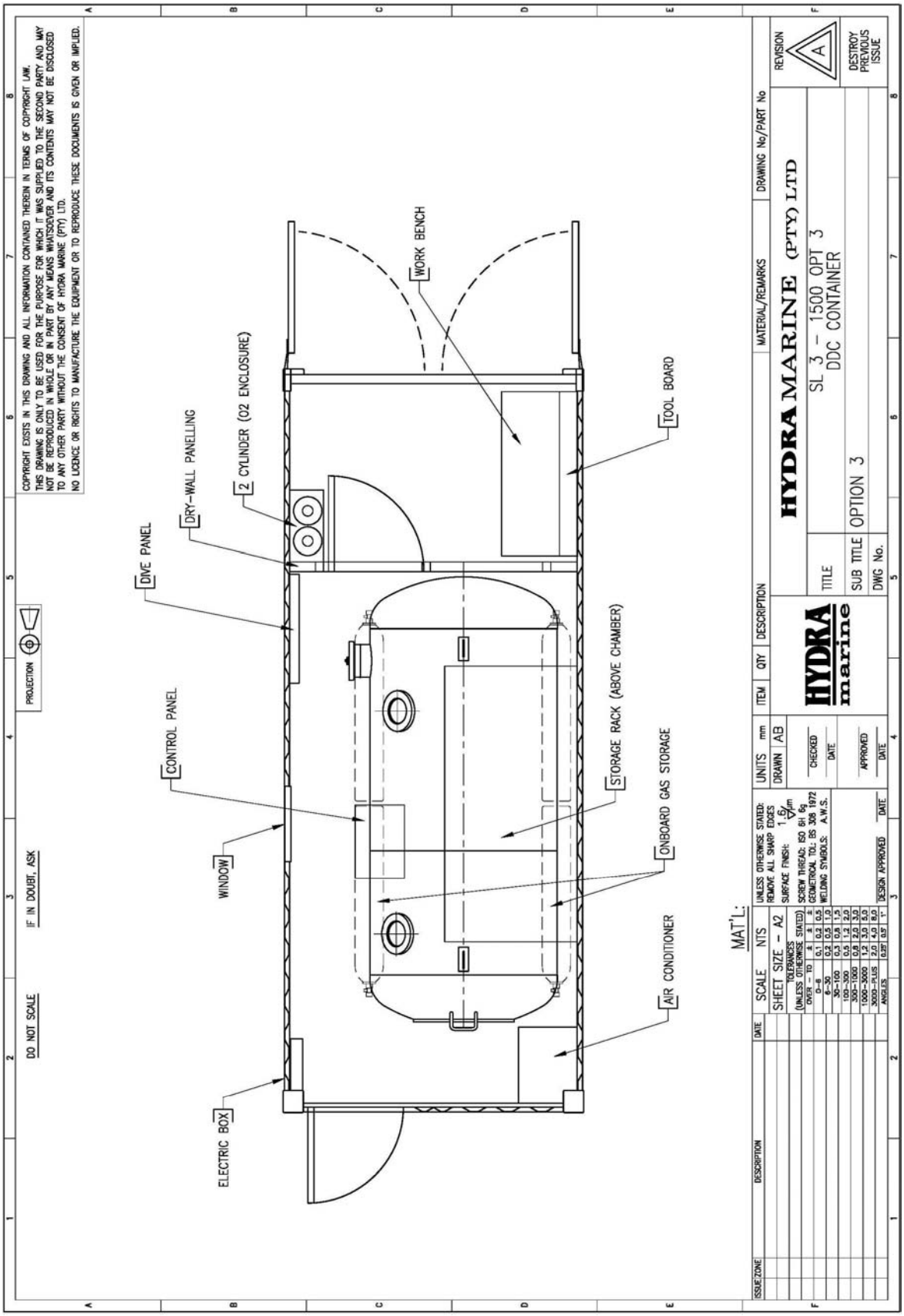CONTAINERISED SYSTEM